THM

Hydraulic Steering Unit

Series OSPT
Displacement : 50 to 400cc/rev
Max Pressure up to 175 bar
Max flow 40lpm

Features

- High efficiency, long service life.
- Compact & convenient
- Low pressure drops & steering torque
- Ports available to DIN, ISO or SAE
- Sizes 50 to 400cc/rev
- Available with built in valve functions shock, inlet check, suctions & relief valves
- According to European & US standards
- Extensively used in forklift trucks, tractor, Combines & loaders

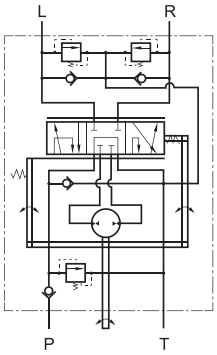

OSPT-N1
Open center non-reaction

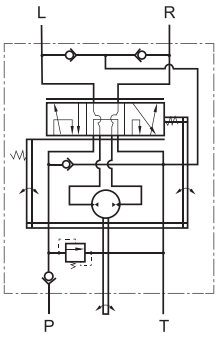

OSPT-R1
Open center reaction

How to order : OSPT | N1 | -100 | 01/ | A | 14 | T3 | N

Steering control unit

Open centre non reaction = N1
Open centre reaction = R1

Displacement cc/rev = 50, 63, 80, 100, 125, 160, 200, 250, 280, 315, 400

Series..... = 01

Valve Options

relief valve + shock valves + suction valves	= A
relief valve + shock valves	= B
relief valves + suction valves	= C
shock valves + suction valves	= D
suction valves	= E

relief valve pressure = 60 bar, 80 bar, 100 bar, 120 bar, 140 bar, 160 bar
Shock valves pressure = 200 bar, 220 bar

thread port details = T1-T2-T3-T4-T4-T5-T6-T7

NBR (Buna-N) Seal = N
FPM (Viton) Seal = V

Note : All OSPT are painted in black color

All Dimensions in mm

Unit Dimensions OSPT-N1/R1

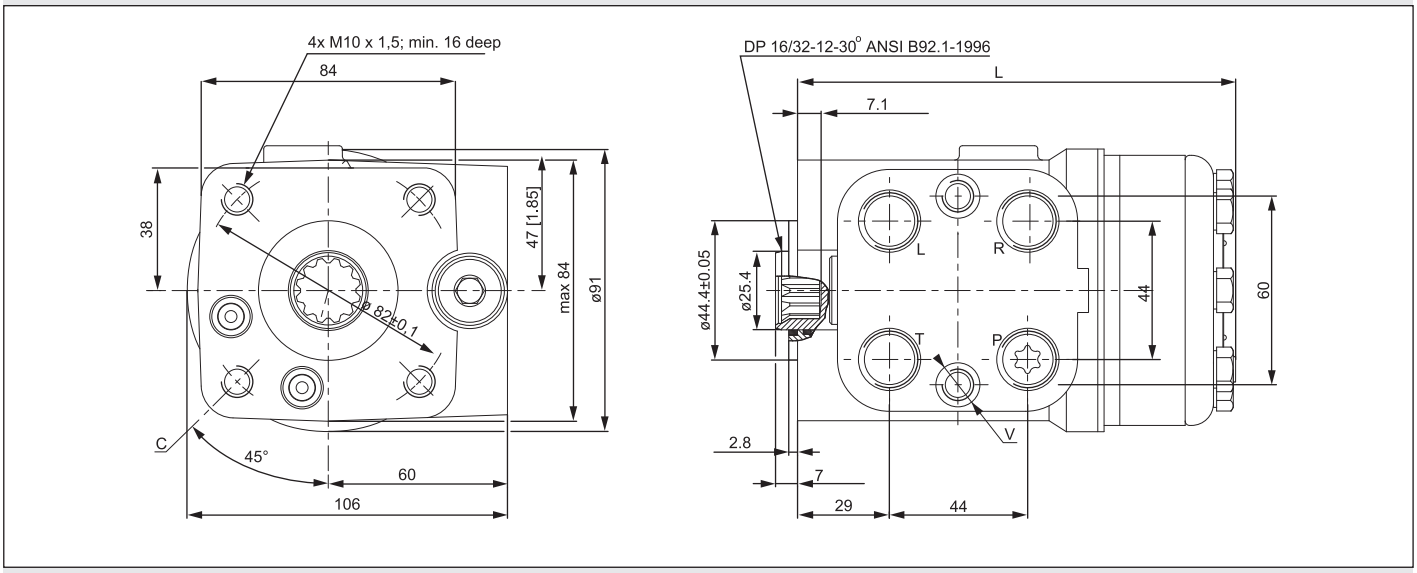

Technical data OSPT-N1/R1

TYPE	Displacement (ml/r)	Rated Flow (l/min)	Max.input Pressure (bar)	Max.Cont.Back Pressure (bar)	Normal Input Torque (N.m)	Length (mm)	Weight (kg)
OSPT-N1/R1 -50	50	5	175	25	<2.5	131	5.4
OSPT-N1/R1 -63	63	6	175	25	<2.5	133	5.5
OSPT-N1/R1 -80	80	8	175	25	<2.5	135	5.6
OSPT-N1/R1-100	100	10	175	25	<2.5	138	5.7
OSPT-N1/R1-125	125	13	175	25	<2.5	141	5.9
OSPT-N1/R1-160	160	16	175	25	<2.5	146	6.0
OSPT-N1/R1-200	200	20	175	25	<3	151	6.2
OSPT-N1/R1-250	250	25	175	25	<3	157	6.5
OSPT-N1/R1-280	280	28	175	25	<3	1162	6.6
OSPT-N1/R1-315	315	32	175	25	<3	167	6.9
OSPT-N1/R1-400	400	40	175	25	<3	177	7.2

Thread / Port details

CODE	Port P,T,R,L Thread	Column Mounting Thread C	Valve Mounting Thread V
T1	M20 x 1.5 deep 14mm	4-M10 deep 17mm	2-M12 deep 16mm
T2	M22 x 1.5 deep 14mm	4-M10 deep 17mm	2-M12 deep 16mm
T3	M18 x 1.5 deep 14mm	4-M10 deep 17mm	2-M12 deep 16mm
T4	G1/2 deep 14mm	4-M10 deep 17mm	2-M12 deep 16mm
T5	3/4-16 UNF O-ring deep 14mm	4-3/8-16 UNC deep 16mm	2-3/8-24 UNF deep 16mm
T6	M20 x 1.5 O-ring deep 14mm	4-M10 deep 17mm	2-M12 deep 16mm
T7	M18 x 1.5 O-ring deep 14mm	4-M10 deep 17mm	2-M12 deep 16mm

Port type	Standard
T1, T2, T3, T6, T7	JB/T7912-1999 (ISO262)
T4	GB/T707-1987 (ISO228/1)
T5	ANSI B1.1-1982

THM

The specified data is for product description purposes only and may not be deemed to be guaranteed unless expressly confirmed in the contract.

THM
THM Huade Hydraulics (P) Ltd
F-127, Focal Point, Phase VIII
Ludhaiana-141010, India
Phone: 0091+161+2672777, Fax: 0091+161+2672778
www.thmhuade.com
info@thmhuade.com, sales@thmhuade.com