Rev. No	Revision note	Date	Signature	Checked

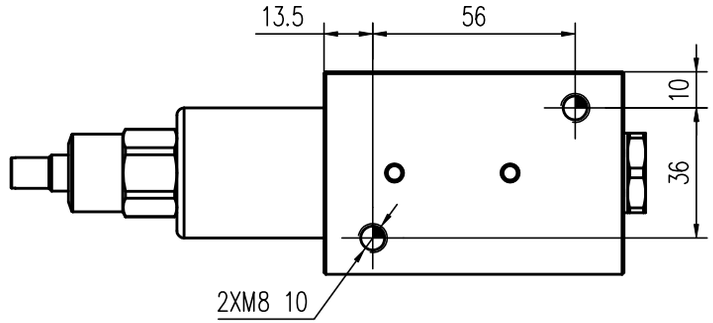

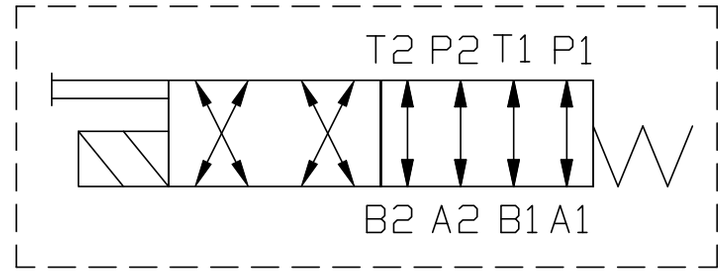

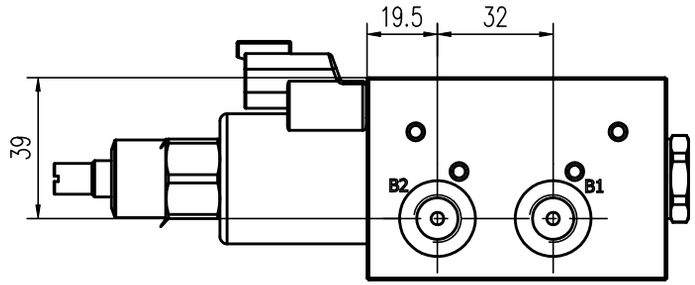

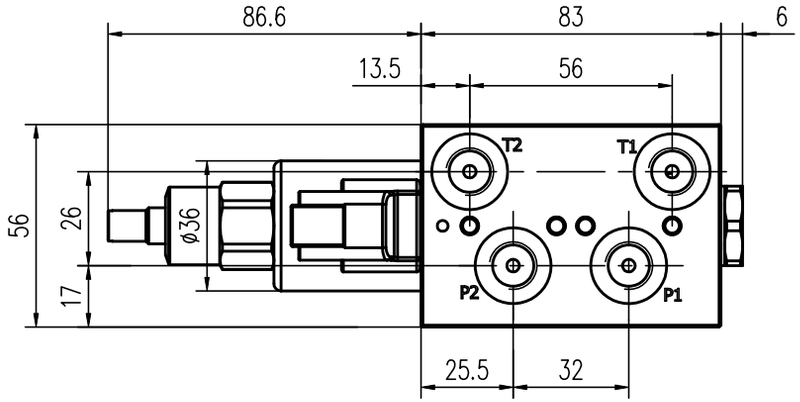

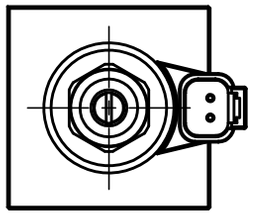

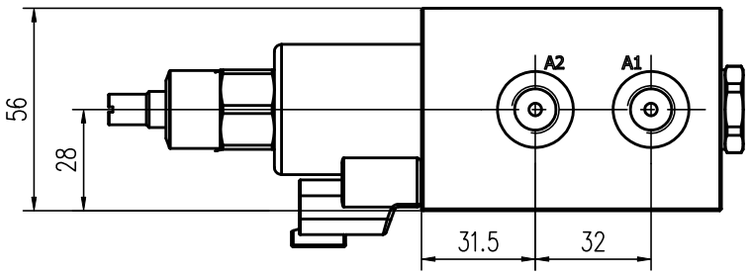

Technical Parameters

1. Rated pressure: 100Bar, rated flow: 10L/Min;
2. Solenoid valve voltage: DC13V±15%,
   connector interface: DT04-2P, waterproof grade: IP69K;
3. Electromagnet power: 20W;
4. Operating temperature range: -20°C-+90°C;
5. Use cleanliness range: within NAS level 9;
6. All external threaded interfaces: G1/4 DIN 3852.

REV	ALTERATION	DATE	DESIGNED	APPROVED	NPCR
A					

UNLESS OTHERWISE STATED ALL DIMENSIONS IN MM
TOL. - LINEAR: ±0.2
- ANGULAR: ±0.1

DESIGNED		STANDARD	
COLLATED		APPROVED	
CHECKED		MATERIAL/ HEAT	
TECHNICS		PASS	

THM HYDRAULICS

THM HUADE HYDRAULICS PVT LTD
EMAIL: sales@thmhuade.com, salesho@thmhuade.com

SERIES : 2 Position 8 way solenoid valve

PRODUCT UID: T014511281

MATERIAL:	WEIGHT:	SCALE:	DWG NO.:	I / NO.: