Rev. No	Revision note	Date	Signature	Checked

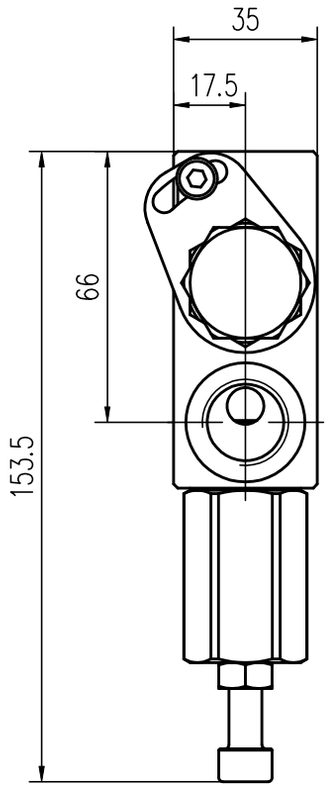

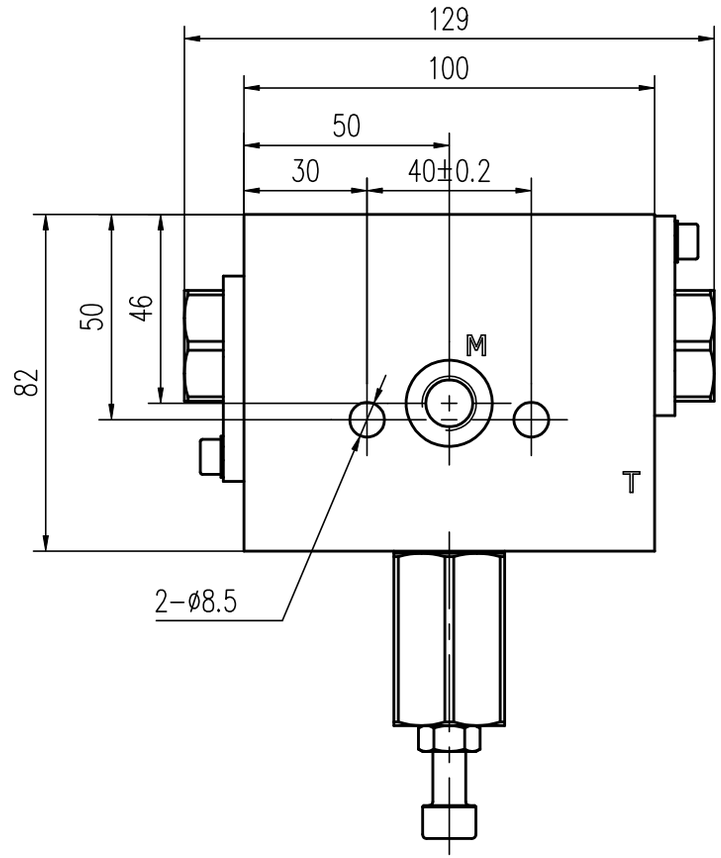

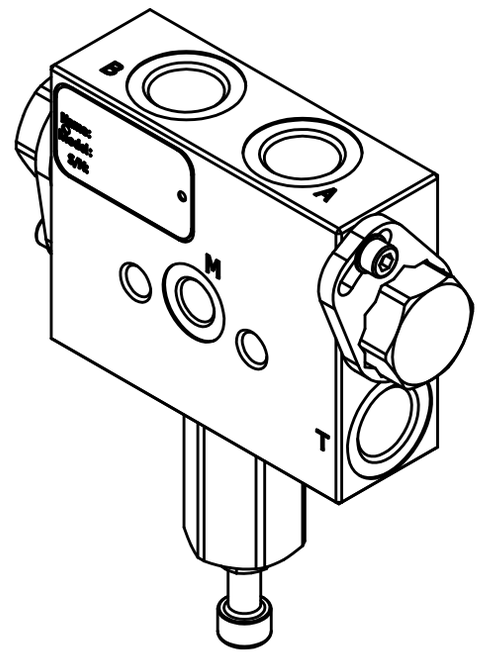

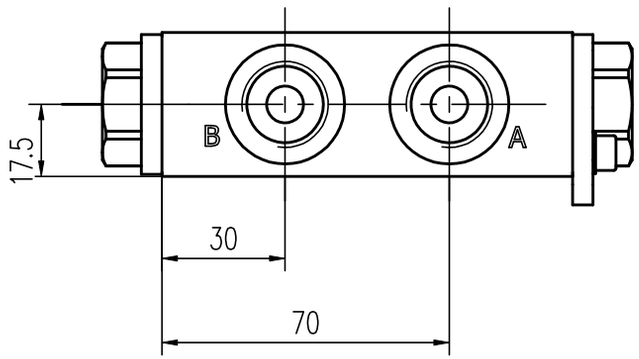

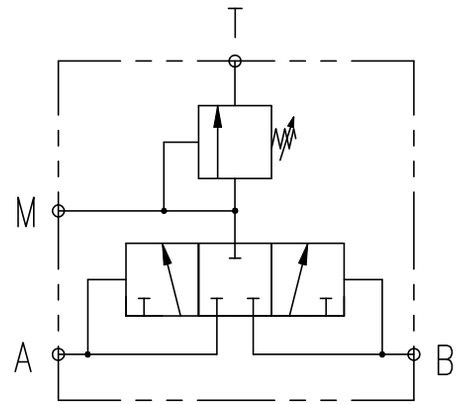

Technical Parameters

1. Rated pressure: 450bar;
2. Rated flow: 60L/min;
3. Opening pressure: 0-30bar,Q=10L/min. - Factory setting: 12bar,
4. Use cleanliness range: within NAS level 9;
5. Working oil temperature: -20°C- +90°C;17.5
6. Oil port standard: M: DIN 3852 G1/4 A.B.TO: DIN 3852 G1/2

REV	ALTERATION	DATE	DESIGNED	APPROVED	NPCR
A					

UNLESS OTHERWISE STATED ALL DIMENSIONS IN MM
TOL.- LINEAR: ±0.2
- ANGULAR: ±0.1

DESIGNED		STANDARD	
COLLATED		APPROVED	
CHECKED		MATERIAL/ HEAT	
TECHNICS		PASS	

THM HYDRAULICS

THM HUADE HYDRAULICS PVT LTD
EMAIL: sales@thmhuade.com, salesho@thmhuade.com

SERIES : Flush Valve

PRODUCT UID: T014511285

MATERIAL:	WEIGHT:	SCALE:	DWG NO.:	I / NO.: