Rev. No	Revision note	Date	Signature	Checked

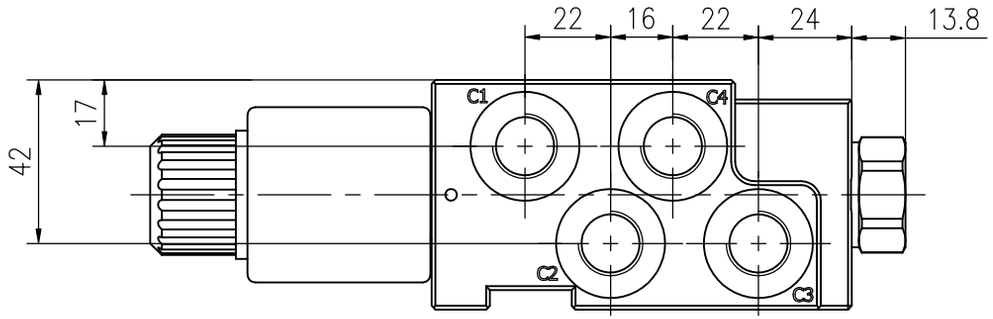

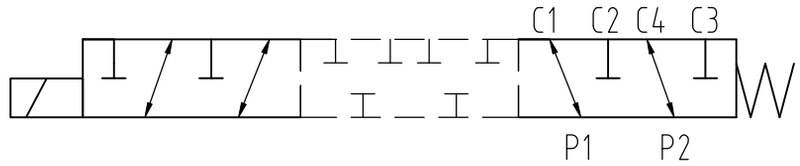

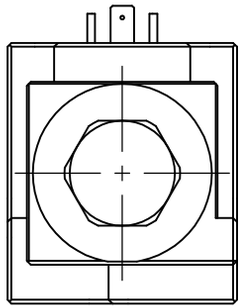

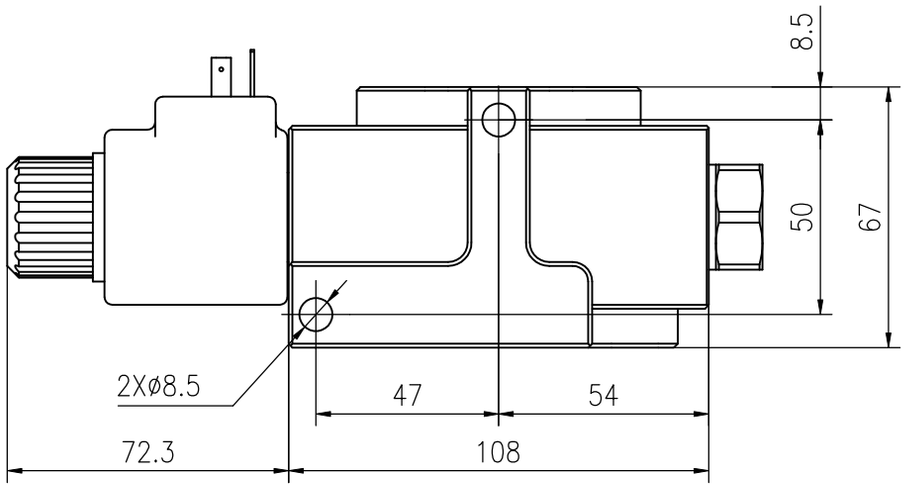

JIS B2351 G3/8 oil port

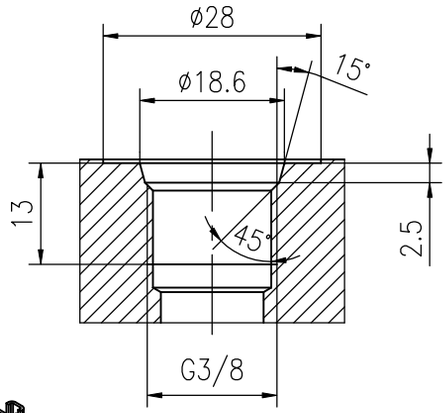

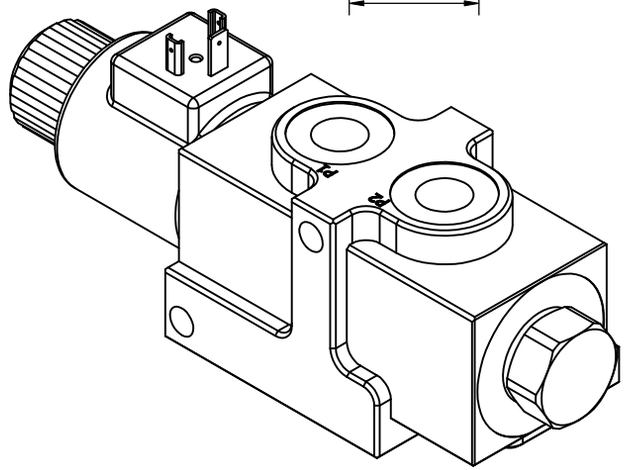

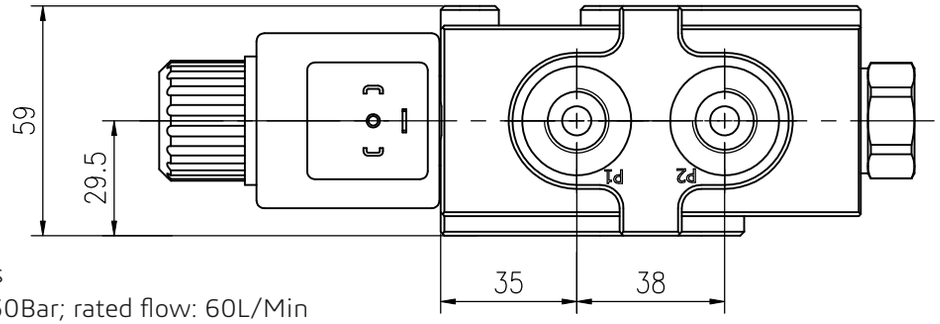

Technical Parameters

1. Rated pressure: 250Bar; rated flow: 60L/Min
2. Solenoid valve voltage: DC12V±15%;
   Waterproof level: IP65KSolenoid valve power: 30W
3. Operating temperature range: -20°C-+90°C
4. Use cleanliness range: within NAS level 9
5. All external threaded interfaces: JIS B2351 G3/86.
   The surface of the valve block is zinc-nickel alloy plated

REV	ALTERATION	DATE	DESIGNED	APPROVED	NPICR
A					

UNLESS OTHERWISE STATED ALL DIMENSIONS IN MM
TOL.- LINEAR: ±0.2
- ANGULAR: ±0.1

DESIGNED		STANDARD	
COLLATED		APPROVED	
CHECKED		MATERIAL/ HEAT	
TECHNICS		PASS	

THM HYDRAULICS

THM HUADE HYDRAULICS PVT LTD
EMAIL: sales@thmhuade.com, salesho@thmhuade.com

SERIES : 2 Position 6 way solenoid valve

PRODUCT UID: T014511289

MATERIAL:	WEIGHT:	SCALE:	DWG NO.:	I / NO.: